DH-4A-90L

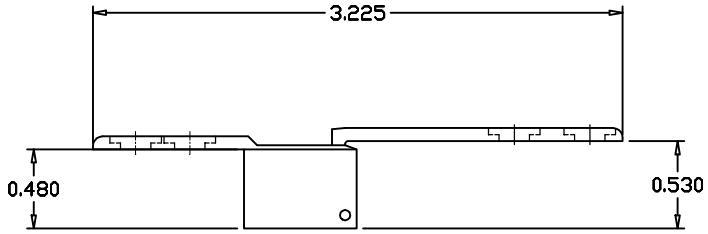

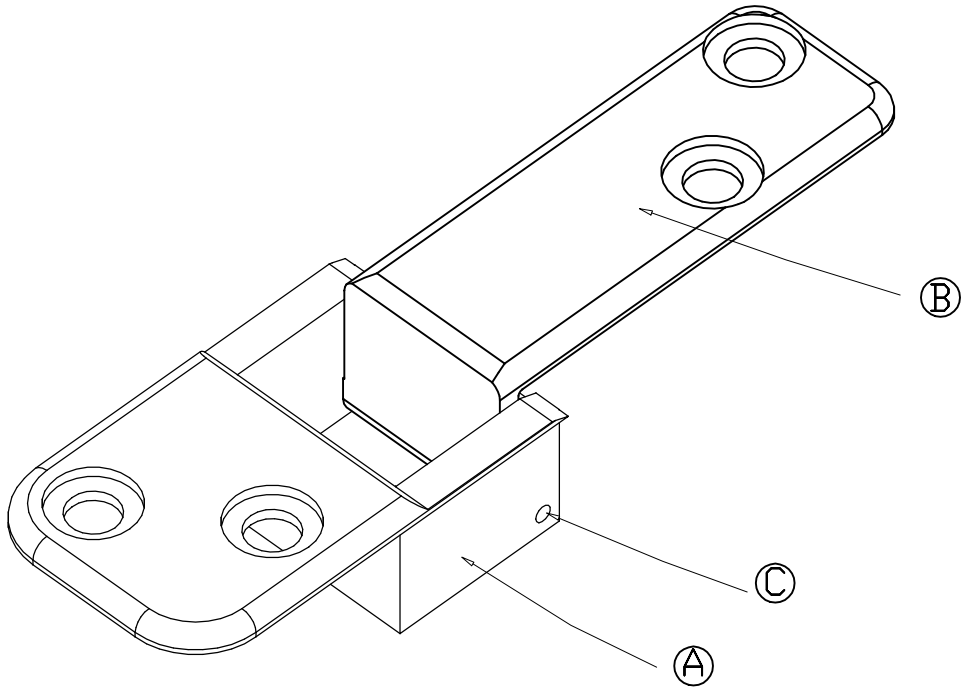

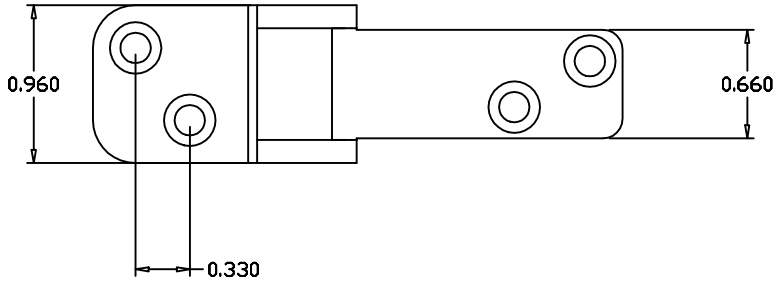

MORGAN HINGES

Morgan Hinges, Inc.
12262 Genova Court
Frisco, TX 75035
(469) 362-8090
www.morganhinges.com

A - One DH-4A-90 Side Frame (see pg. 2).
B - One DH-4A-90L Center Link (see pg. 3).
C - 1/16" x 7/8" stainless steel dowel pin (Not shown, Brighton Best or equivalent). Min. shear load 800 lbs.

- Overall tolerances: +/- 0.010

- The hinge pieces are hand filed to achieve an appropriate fit. Accordingly, the piece dimensions may vary by +/- 0.010 or more.

DH-4A-90L Door Hinge ASSY	
Material: 6061-T-6511 Aluminum	
Tolerance: +/- 0.010	Units: IN
Revision Date: AUG-14-12	PG: 1/3